EUROMAG INTERNATIONAL

Electromagnetic flowmeters

Converter MC 308

DS010002 - rev. 1 - March 2005

Converter MC 308

The models of the EUROMAG INTERNATIONAL series MC308 represent the standar electronics capable of satisfying the requierements of most of the aplications requested. They can be connected to any EUROMAG electromagnetic sensor.

1. Case and assembly

The MC308, in the standard version, is contained in an ABS case of 148 x 257 x 106 mm dimensions, and its weight is 1200 g, or in a die-cast aluminium case of 280 x 180 x 115mm dimensions and its weight is 3300 g (optional).
The MC 308 converters can be mounted both in the compact and separate version. In the aluminium case version, a special bracket in the compact installation permits the converter to remain vertical whatever the position of the sensor might be (vertical or horizontal). In the separate version, the MC308 converters are connected to the sensors by means of a pair of cables, whose maximum lenght depends on the liquid conductivity (see diagram fig. 1). The weight and dimensions are better represented in Table 3.

MC308 with aluminium case

MC308 with ABS case

2. Coupling with sensors

The MC308 converters can be coupled with any EUROMAG sensor (Table 1) whose coefficients KA and KB are stated during calibration and inscribed on the sensor plate in the factory. The coupling is done by entering into the converter, via the keyboard, these two coefficients. Generally, this operation takes place in the factory, but it can also be done in the working place (see "Programming").

3. Network connection

Several flow meters equipped with the MC308 converter can be connected to a network (up to 32 devices). Therefore only one TRM200 or a PC equipped with an RS485 interface are able to communicate with each of the 32 flow meters both for carrying out the remote presetting and also for receiving and showing the 32 measurements on the display or video. The extension of this network must not exceed 1500m.

4. "Low consumption" rate

When low energy consumption is required (battery operation and/or solar source) it is possible to activate the MC308 on "low consumption" mode. The system cycles between two positions:

4.1. "standing time" which lasts 10 seconds during which the flow rate is measured.(at 10 samples per second);

4.2. "sleeping time" (programmable duration at 1'; 5'; 10') during which the system continues generating impulses, showing the readings, and if required, it gives the signal 4-20 mA corresponding to the average of the last readings.

5. On/off outputs

The MC 308 converter has two ON/OFF outputs. The first one can be used in two different ways:

a) to generate totalizing impulses (one impulse per unit of volume passed) which can control a remote counter (electronic or mechanic);

b) to generate a frequency proportional to the flow rate. This frequency is generally used in a PLC or in a frequency- current converter.The second ON/OFF output is reserved for one of the following alarms used via the keyboard:

- maximum flowrate
- minimum flowrate
- empty pipe
- out of scale
- reverse flowrate
- dose control

Both outputs are a transistor with a collector and emitter available in the terminal board and protected from over voltages due to inductive loads. Moreover, a 24 Vdc power supply, used for both outputs, is available in the terminal board. Otherwise, an external direct voltage may be used only if it is between 5 and 40 V. For applications in which measure readings are required in the control room and not in the field, it may be advisable to install the blind converter (without keyboard and display) in the field and to connect it via the RS 485 to a TRM200 repeater installed in the control room. The TRM200, equipped with keyboard and display, permits both the measure readings and the converter remote presetting. This distance can reach 1500 meters. The presence of the TRM 200 does not exclude the possibility of using the MC308 converter outputs.

6. Dosage.

The MC 308 converter permits to dose any quantity of liquid. The dosed volumen is entered via the keyboard; the start command is given with the digital imput (local or remote) in this way, on/off output N º2 commands the valve opening. Once the preset volumen is reached, output N°2 switches off the flowrate.

7. Empty pipe alarm.

The MC 308 converter can be connected to sensors equipped with empty pipe electrodes to detect the empty pipe condition.

8. Precision

The MC 308 converter coupled to any EUROMAG sensor guarantees an accuracy of 0,2% if the installation and usage instructions are strictly followed.

9. Main characteristics

The MC 308 electronic converter is adapted to all electromagnetic sensors produced by EUROMAG. The main characteristics of the MC308 converters are listed in Table 1.

10. Programming

MC 308 converters are very versatile devices thanks to their programmability, that can be done in different ways:

1) Keyboard and display, if present (the MC 308 can be ordered without these two elements);

2) Connection to a TRM 200 (see manual TD 128).

3) TRM 100 portable programmer (see manual TD 124).

The ease of programming by means of the menu or the ways above mentioned makes the MC308 converter particularly flexible about any requirement.The main parameters to be programmed are:

- KA and KB values
- ND of the sensor
- Full scale flow rate
- Volume corresponding to one impulse.
- Habilitation and threshold of alarms.
- Dosage volume.

The default values of these and other parameters, in absence of any other request on behalf of the client, are assigned in the factory. These values are shown on the presetting sheet consigned with the goods.The user can change the preset parameters at any moment. In order to avoid untimely modifications some parameters are protected by a "password" or a personal key-word.

Maximum lenght of cables according to the liquid conductivity.

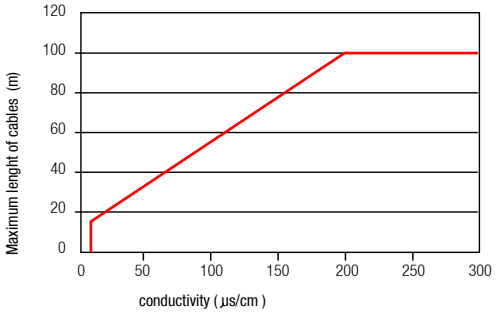

figure 1

Characteristics of the MC308 series

Power supply	HV-90...264 Vac	LV - 24 Vac/dc
Low consumption	●	●
Output 1ON/OFF Impulse/Frequency 24 Vdc	●	●
Output 2 ON/OFF 24 Vdc (alarms) [1]	●	●
Output in current 4(0) - 20 mA [2]	●	●
Digital imput [3]	●	●
Use of terminal TRM100	●	●
Electric connections PG 11	●	●
Direct/reverse flowrate	●	●
Universal empy pipe alarm	●	●
Interface RS 485 for network connection [4]	●	●
Output 4(0) - 20 mA	●	●
Autoranging	●	●
Display 2 lines and 16 characters	●	●
Metric System: decimal, English, American	●	●
Degree of protection IP 67	●	●
Language: Italian, English, Spanish	●	●
Operation environmental temperature -20 °C a + 60 °C	●	●

table 1

[1] In Table 2 the available alarms are shown.

[2] Maximum load 800 Ohm

[3] In Table 2 all the possible funtions of the digital input are shown.

[4] Interface MODBUS RS232/485 available on request.

Devices	Available Functions
Digital input	- Totalizer reset
	- Totalizer stop via internal and external
	- External calibration system (if certified)
	- Scale exchange
	- Start/stop dosage
Output 4 (0) ¸ 20 mA	Maximum load 800 Ohm
Output impulse/ frequency	Maximum frequency output 1kHz
	Impulses duration 0,5…9999 ms

table 2

Overall dimensions

Dimensions and weight of MC308 converters series

Versions of MC308	Width	Height	Depth	Weight
MC308 in ABS [1]	148.0 mm	257.0 mm	106.0 mm	1200 g
MC308 in Aluminium [2]	170.0 mm	275.0 mm	132.0 mm	4000 g

[1] Figure 2

[2] Figure 3

Table 3

Fig. 2 - MC 308 in ABS

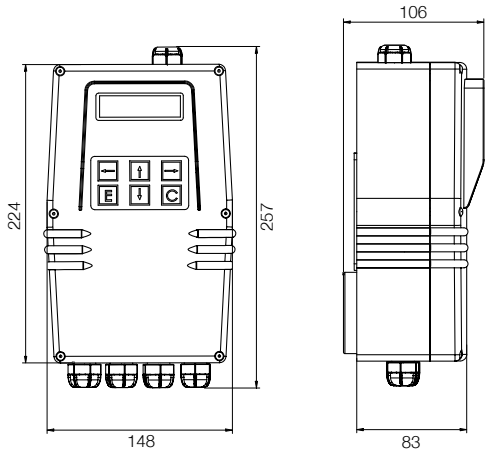

Fig. 3 - MC 308 in Aluminium

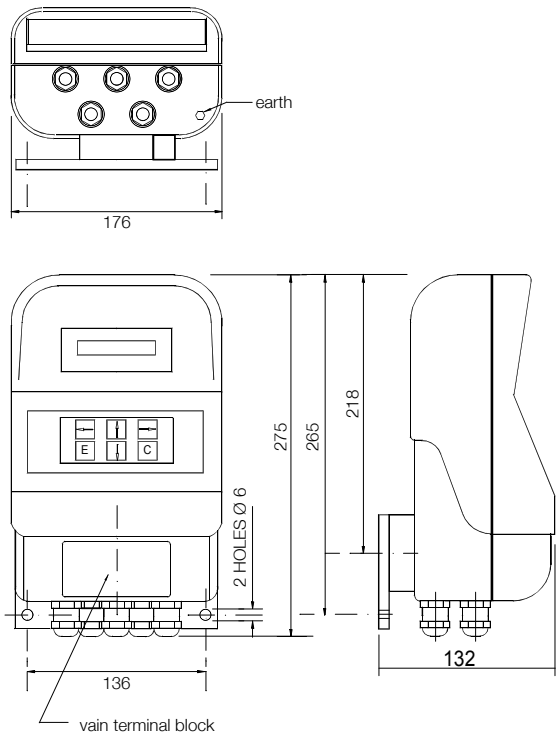

The data shown in this manual are subject to modification without prior notice.

EUROMAG INTERNATIONAL SRL - 35035 MESTRINO (PD) - Vía Torino, 3 (Italy) - Tel. +39 049 9005064 ; Fax +39 049 9007764 - http://www.euromag.it
FILIALE ARGENTINA - Av. Lincoln 4240 (1419) Buenos Aires - Argentina - Tel: (54 11) 4502.3535 o 4503.7040 ; Fax: (54 11) 4502.0921