S.P. No.

Yamatake Corporation

製品仕様書 SPECIFICATIONS

⚠01 SECTION OF CONNECTOR

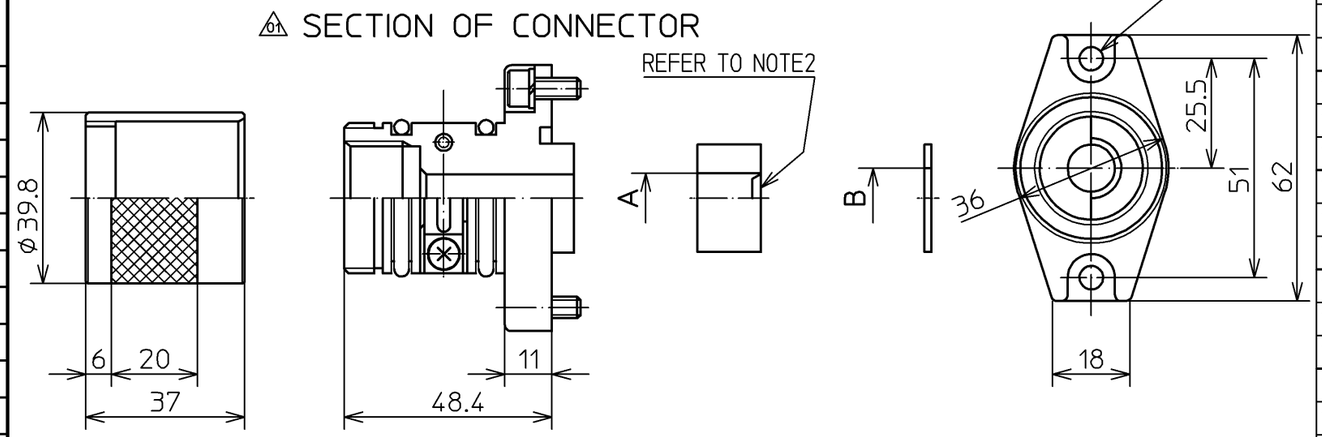

CATALG LISTING	APPLICABLE CABLE O. D.	SEAL RING I. D. (A)	WASHER I. D. (B)	TYPE OF CLAMP	PROTECTIVE TUBE SIZE	USED FOR
2PA-JEX108	7.5 DIA~ 8.5 DIA	8.5 DIA	11 DIA	TYPE1	PARALLEL PIPE THREAD G1/2-14 5THREADS MIN	LX VCX SERIES
2PA-JEX109	8.5 DIA~ 9.5 DIA	9.5 DIA				
2PA-JEX110	9.5 DIA~10.5 DIA	10.5 DIA				
2PA-JEX111	10.5 DIA~11.5 DIA	11.5 DIA	14 DIA	TYPE2		
2PA-JEX112	11.5 DIA~12.5 DIA	12.5 DIA				
2PA-JEX113	12.5 DIA~13.5 DIA	13.5 DIA				
2PA-JEX208	7.5 DIA~ 8.5 DIA	8.5 DIA	11 DIA	TYPE1	PARALLEL PIPE THREAD G3/4-14 5THREADS MIN	
2PA-JEX209	8.5 DIA~ 9.5 DIA	9.5 DIA				
2PA-JEX210	9.5 DIA~10.5 DIA	10.5 DIA				
2PA-JEX211	10.5 DIA~11.5 DIA	11.5 DIA	14 DIA	TYPE2		
2PA-JEX212	11.5 DIA~12.5 DIA	12.5 DIA				
2PA-JEX213	12.5 DIA~13.5 DIA	13.5 DIA				
2PA-JEX408B	7.5 DIA~ 8.5 DIA	8.5 DIA	11 DIA	TYPE1	PARALLEL PIPE THREAD G3/4-14 5THREADS MIN	CX SERIES
2PA-JEX409B	8.5 DIA~ 9.5 DIA	9.5 DIA				
2PA-JEX410B	9.5 DIA~10.5 DIA	10.5 DIA				
2PA-JEX411B	10.5 DIA~11.5 DIA	11.5 DIA	14 DIA	TYPE2		
2PA-JEX412B	11.5 DIA~12.5 DIA	12.5 DIA				
2PA-JEX413B	12.5 DIA~13.5 DIA	13.5 DIA				
2PA-JEX414B	13.5 DIA~14.5 DIA	14.5 DIA	17 DIA	TYPE2		
2PA-JEX415B	14.5 DIA~15.5 DIA	15.5 DIA				
2PA-JEX416B	15.5 DIA~16.5 DIA	16.5 DIA				

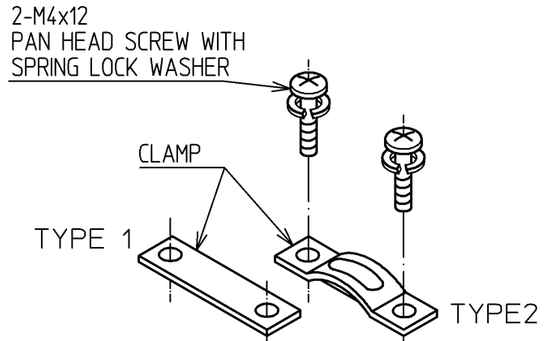

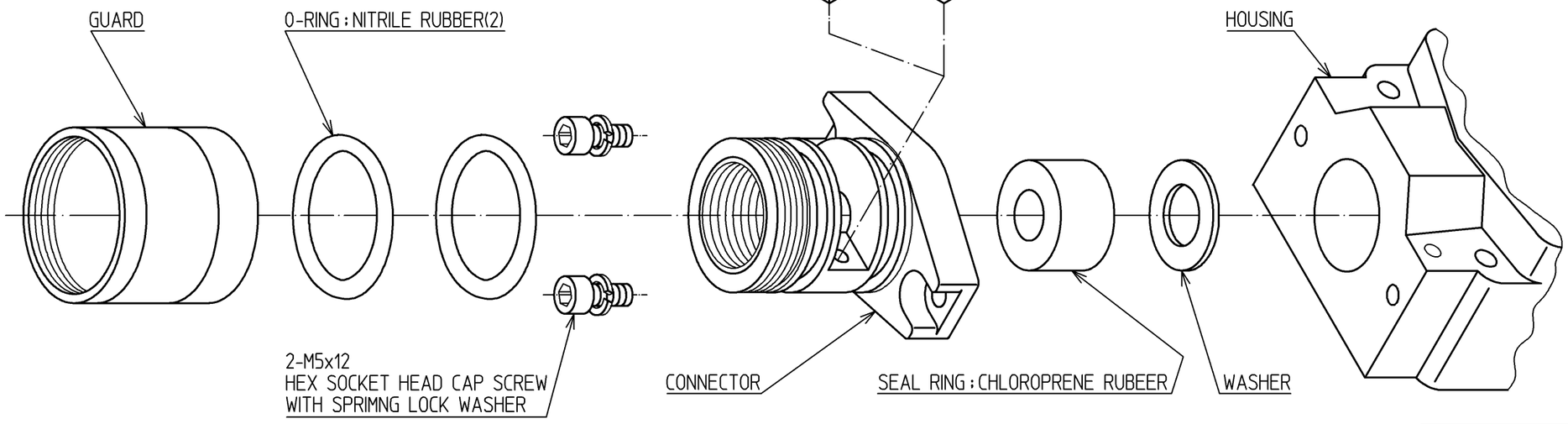

NOTES 1. FOR KEEPING PROPER EXPLOSIONPROOF CHARACTERISTICS, TIGHTEN COMPLETELY WHEN ASSEMBLING CONNECTOR TO SWITCH.
2. BREAK THIN WALL OF SEAL RING BEFORE ASSEMBLING TO SWITCH.

改番 REV.	来歴 RECORD	日付 DATE	担当 BY	検閲 APPD.
01	JE005-1205	2,14,'05	HARADA	ARAI

作成DR. SHIMIZU 2. 15. '93		尺度SCALE	記入のない公差 TOL. UNLESS NOTED ±0.4
検図CHK. ARAI 2. 16. '93	形番 MODEL	2PA-JEX SERIES	
認可 APPD TSUKAKOSHI 2. 17. '93	名称 NAME	CONNECTOR	
日付DATE 2. 18. '93	図番 NO.	AD50857E	改番REV. 01

頁 改番

"RESTRICTIONS ON USE"

This product has been designed, developed and manufactured for general-purpose application in machinery and equipment.

Accordingly, when used in applications outlined below, special care should be taken to implement a fail-safe and/or redundant design concept as well as a periodic maintenance program.

- Safety devices for plant worker protection
- Start/stop control devices for transportation and material handling machines
- Aeronautical/aerospace machines
- Control devices for nuclear reactors

Never use this product in applications where human safety may be put at risk.