Yamatake-Honeywell

Specification

ST 3000 Smart Transmitter
Electronic Pressure Transmitter

Model JTG240 (for Gauge Pressure)
Measuring Span: 0.35 to 35kgf/cm²

Introduction

The ST 3000 Pressure Transmitter measures a process pressure and transmits an analog 4 to 20mA DC output or digital output proportional to the measured variable. The transmitter is a microprocessor-based instrument, whose parameters and settings (range, damping time constant, linear or square-root output, constant current output and others) can be remote-controlled from the instrument room via the SFC (Smart Communicator).

5

Standard Specifications

Item	Specifications
Measuring span (Continuously adjustable)	0.35 to 35kgf/cm² (Recommended measuring span: 0.7 to 35kgf/cm²)
Setting range	$-1 \leqq$ URV(*1) $\leqq 35$kgf/cm², $-1 \leqq$ LRV(*2) $\leqq 35$kgf/cm²
Output	Analog output (4 to 20mA DC)/Digital output
Accuracy(*3)	Percentage with respect to x (kgf/cm²) that represents the URV or LRV of the calibrated range, or the span – whichever is greatest. ±0.1% ..... When x is 3.5kgf/cm² or greater. $\pm[0.05+(0.05\times\frac{3.5}{x})]\%$ ..... When x is less than 3.5kgf/cm². (with damping effected)
Supply voltage and load resistance	10.8 to 45V DC (See Figure 1.)
Working pressure rating	35kgf/cm² max. (For vacuum pressures, see Figure 2.)
Overpressure limit	52.5kgf/cm² max.
Operating temperature range	Ambient temperature: Normal operating conditions; −40 to + 85°C Operative limits (for short period); −50 to + 93°C Transportation and storage conditions; −50 to + 85°C Meter body (Process fluid) temperature: Normal operating conditions; −40 to +110°C Operative limits (for short period); −50 to +125°C
Operating humidity range	Normal operating conditions: 10 to 90% RH
Temperature effect(*3,*4) (Shift with respect to setting range)	Percentage with respect to x (kgf/cm²) that represents the URV or LRV of the setting range, or the span – whichever is greatest. Zero shift: $\pm[0.25+(0.1\times\frac{3.5}{x})]\%/55°C$ change Combined shift (Including zero and span shifts): ±0.5%/55°C change ..... When x is 3.5kgf/cm² or greater. $\pm[0.35+(0.15\times\frac{3.5}{x})]\%/55°C$ change ..... When x is less than 3.5kgf/cm².
Stability against supply voltage change	0.005% FS/V

(*1): URV denotes the value for 100% (20mA DC) output.
(*2): LRV denotes the value for 0% (4mA DC) output.
(*3): Within a range of URV ≧ 0 and LRV ≧0.
(*4): Refer to the temperature effect diagram (Figure 3).
(*5): For the performance and external dimensions of corrosion-resistant type, refer to the specification sheet for corrosion-resistant application.

Item	Specifications
Dead time	Approx. 0.4 sec.
Damping time constant	Adjustable within a range of 0.2 to 32 sec. by 10 steps. (at 25°C)
Process connection	Rc½, ½NPT internal thread, Rc¼, ¼NPT internal thread
Electrical conduit connection	G½ internal thread
Structure	Water-proof and dust-proof structure: JIS C0920 water-tight, JIS F8001 Class 2 water-tight, NEMA 3 and 4X, IEC IP67
Materials	Center body: SUS316 Wetted parts of center body: SUS316 (Diaphragm: SUS316L) Meter body cover (Differential pressure chambers): Carbon steel (SF45A), SUSF316 (Reference pressure side: SUSF304) Bolts: SNB7 Nuts: S45C Gasket: Teflon Transmitter case: Aluminium alloy
Finish	Baked acryl paint, light beige (Munsell 4Y 7.2/1.3)
Burnout feature	Lower limit of output value at abnormal condition.
Installation	Can be installed on a 2-inch horizontal or vertical pipe. (Can be directly mounted on a process pipe.)
Weight	Approx. 7.5kg

Selectable Standard Specifications

(The items other than the following are identical with those of the Standard Specifications.)

Item		Specifications
Materials	Meter body cover: PVC	Pressure rating: 15kgf/cm² max. Temperature range: Normal operating conditions; 0 to 55°C (Ambient and meter body (Process fluid) temperature) Transporation and storage conditions: −10 to +60°C Bolts and nuts material: SUS304
Fill fluid	For oxygen and chlorine service (Meter body cover: Other than carbon steel Wetted parts of center body for chlorine service: Tantalum Including no oil finish of wetted parts)	Ambient temperature: Normal operating conditions; −10 to + 75°C Operative limits (for short period); −40 to + 80°C Transporation and storage conditions; −50 to + 85°C Meter body (Process fluid) temperature: Normal oprating conditions; −10 to + 80°C Operative limits (for short period); −40 to +125°C Note) For use on vacuum pressures, please consult us.

Optional Specifications

(The items other than the following are identical with those of the Standard Specifications.)

Item	Specifications
Built-in indicating meter **(Class 2.5)**	Ambient temperature: Normal operating conditions; −10 to +60°C Operative limits (for short period) and transportation and storage conditions; −40 to +85°C
Steam block	Pressure rating: 50kgf/cm² max. Operable temperature: 250°C max. (125°C max. for meter body (Process fluid) temperature) (Not available when meter body cover is made of PVC or monel, or when side connection is specified.)
Corrosion-resistant finish	Corrosion-resistant paint (Baked acryl paint), fungus-proof finish. (Silver paint when meter body cover, adaptor flanges, bolts, nuts, and manifold valves are made of carbon steel.)
Corrosion-proof finish	Corrosion-proof paint (Baked epoxy paint), fungus-proof finish. (Silver paint when meter body cover, adaptor flanges, bolts, nuts, and manifold valves are made of carbon steel.)
Corrosion-resistant finish (Silver paint)	Transmitter case is silver-painted in addition to the above corrosion-resistant finish.
Flame-proof packing type	For electrical connection by the leading-in method of flame-proof packing type for special flame-proof cable connecting adaptor structure.
Explosion protection	JIS C0903 ds2G4 special flame-proof (Ambient temperature: −10 to +70°C, Meter body (Process fluid) temperature: −10 to +100°C) JIS C0903 i3aG4 intrinsic-safety explosion-proof structure, using Zener barrier 8907/51−24/45 (Approval No. 29911) (Ambient temperature: −10 to +60°C, Meter body (Process fluid) temperature: −10 to +100°C) FM flame-proof structure Explosion-proof Class Ⅰ(Gas, steam), Division 1, Group B, C, D Dust-ignition Class Ⅱ(Inflammable dust), Division 1, Group E, F, G Suitable Class Ⅲ(Inflammable fiber), Division 1 FM intrinsic-safety explosion-proof structure Intrinsically safe Class Ⅰ, Ⅱ, Ⅲ, Division 1, Group A, B, C, D, E, F, G Nonincendive(for Class 2 location) Class Ⅰ, Division 2, Group A, B, C, D
No oil finish	Excluding meter body cover of carbon steel

Model Number Table

Basic Model Number	Selection I: Material	Selection I: Fill Fluid	Selection I: Process Connection	Selection II	Options I	Options II	Description		
JTG240							Measuring span: 0.35 to 35kgf/cm²		
							Meter body cover	Vent/drain plugs (for top/botton process connection only)	Wetted parts of center body
	−A						Carbon steel	SUS316	SUS316 (Diaphragm: SUS316L)
	−B						Carbon steel	SUS316	Hastelloy C
	−D						Carbon steel	SUS316	Tantalum
	−E						SUSF316	SUS316	SUS316 (Diaphragm: SUS316L)
	−F						SUSF316	SUS316	Hasteloy C
	−H						SUSF316	SUS316	Tantalum
	−M						PVC	PVC	Hasteloy C
	−P						PVC	PVC	Tantalum
		1					Regular type (Silicone oil)		
		2					For oxygen (Fluorine oil) service		
		5					For chlorine (Fluorine oil) service		
			L				Rc½	Side connection	
			G				½NPT internal thread	Side connection	
			D				Rc¼	Side connection	
			A				¼NPT internal thread	Side connection	
			Q				Rc½	Top or bottom connection	
			R				½NPT internal thread	Top or bottom connection	
			S				Rc¼	Top or bottom connection	
			T				¼NPT internal thread	Top or bottom connection	
				−00000			No selection		
					−X		No option		
					−L		Built-in lightning arrester		
					−M		Built-in indicating meter (Standard scale)		
					−W		SUS304 bolts and nuts		
					−F		With steam block		
					−A		Corrosion-resistant finish		
					−B		Corrosion-proof finish		
					−D		Corrosion-resistant finish, silver paint		
					−N		½NPT internal-thread electrical conduit connection		
					−K		No oil finish		
					−P		One cable adaptor with flame-proof packing		
					−Q		Two cable adaptors with flame-proof packing		
					−J		Long vent/drain plugs		
					−R		Specifications for power plant application		
					−1		JIS special flame-proof structure		
					−2		JIS intrinsic safety explosion-proof structure		
					−3		FM flame-proof structure		
					−4		FM intrinsic safety structure		
					−8		Horizontal pressure-conduit connection type (Process connection is only for the front. Combination with indicating meter is not possible. When corrosion-resistant type is required, consult us.)		
					−9		Vertical pressure-conduit connection, right-side electrical-conduit connection type.		
						−XX	No options		
						−A2	With external zero adjustment (Unavailable combination with FM explosion-proof structure)		
						−A5	Burnout feature (Upper limit of output value at abnormal condition)		
						−D1	With DE meter		

Note :
The items enclosed in the bold-line boxes are for Standard Specifications.

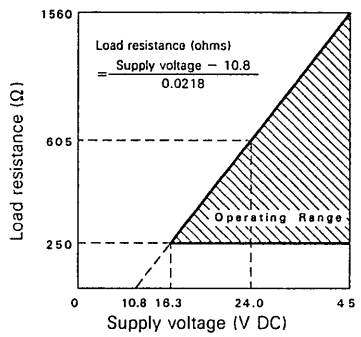

Note: For communication with SFC, a load resistance of 250 ohms or more is needed.

Fig. 1 Supply voltage vs load resistance characteristics

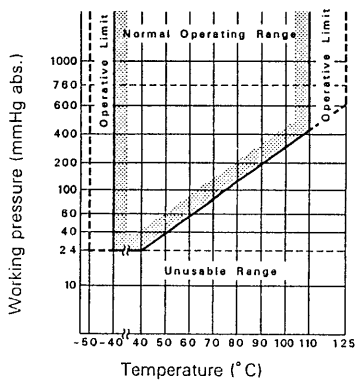

Fig. 2 Working pressure and temperature of wetted parts section

5

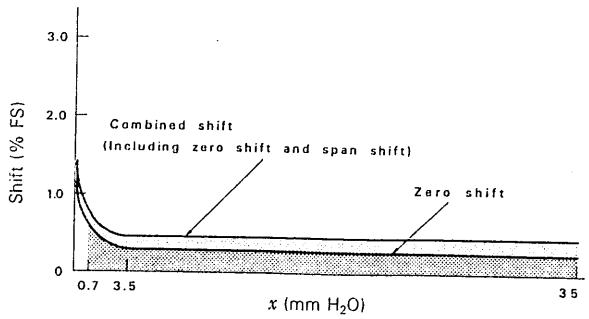

Fig. 3 Range and temperature effect (55 °C change)

(Unit: mm)

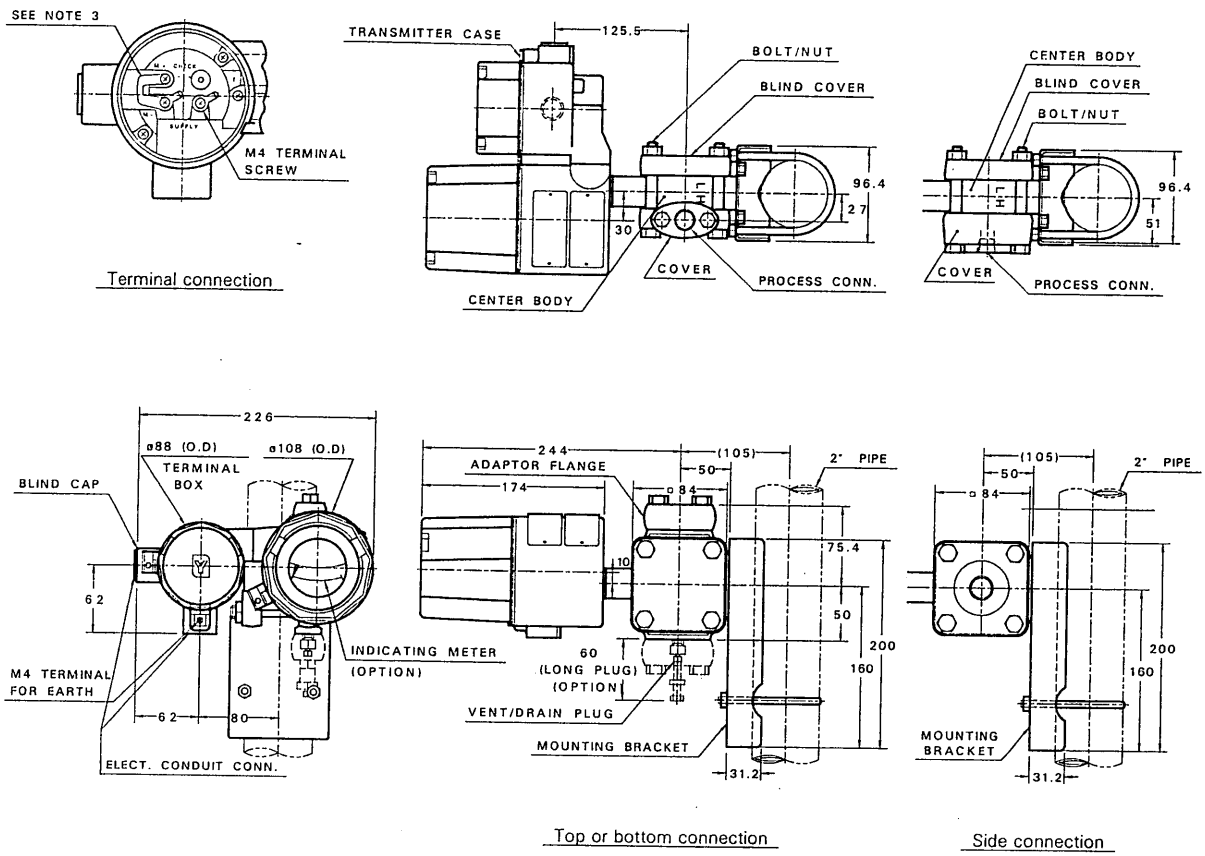

Notes: 1) This transmitter can be mounted in various ways using the holes of the mounting bracket. (The above drawing shows an example of typical mounting.)
2) Mount the transmitter vertically.
3) To use an external indicating meter, disconnect the jumper bar from the M terminals and connect in its place the leadwires of the external indicating meter.
4) The material for blind cover is SUSF304 for cover materials of other than SF45A.

Fig. 4 Dimension drawing

*Specifications are subject to change without notice.