Wiring (Analog Output)

- Integral model : switches is on the right of the terminal box
- Remote model : switches is above the terminal box

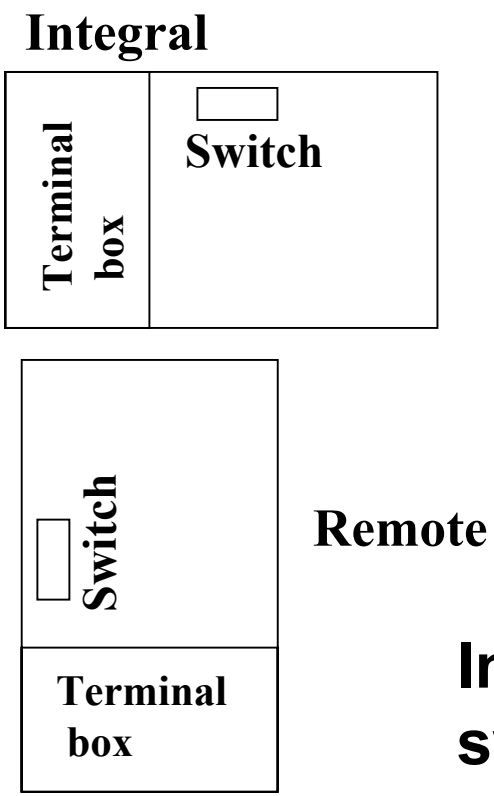

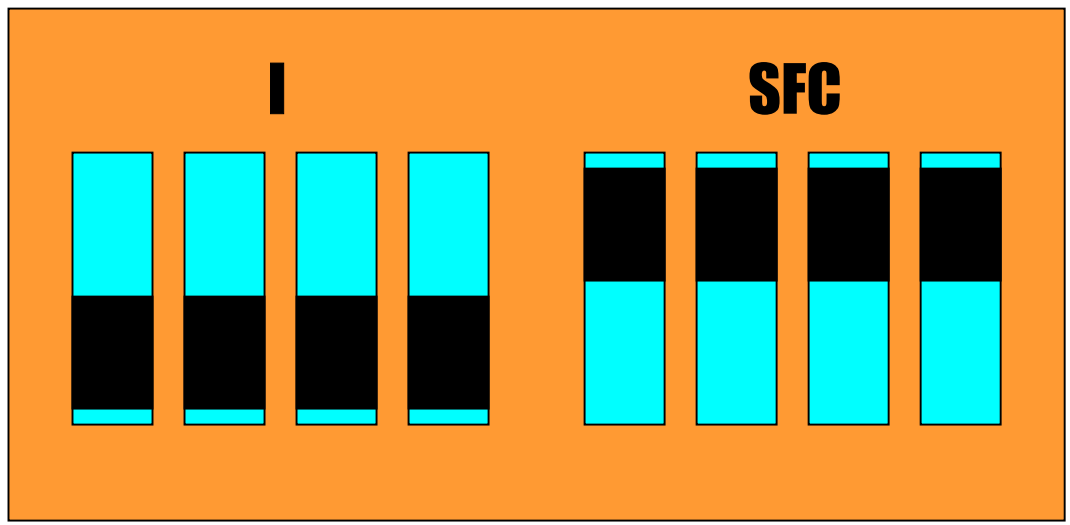

In case of SFC communication, verify the switch position as above.

Wiring (Analog Output)
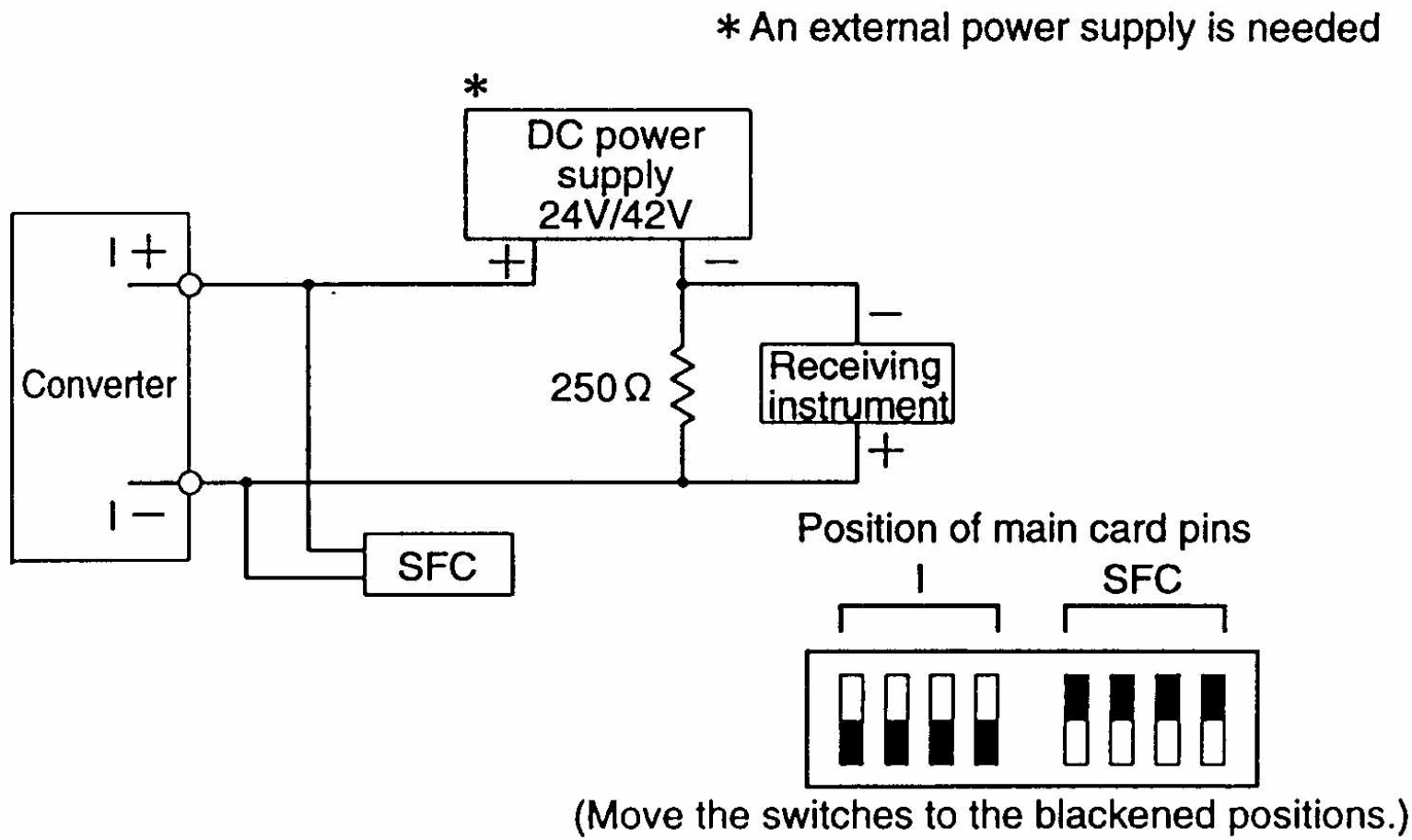
- With SFC communications