Transformers
ATN410, 411, 416

General

ATN transformers are mainly used as line voltage or low voltage power supply for electric or electronic control devices such as electronic control panel, motorized valve, relay etc., in air conditioning systems.

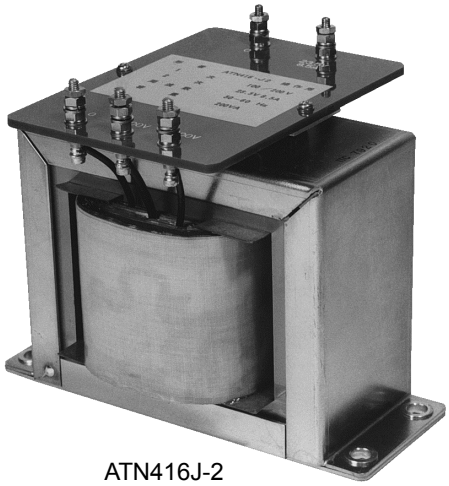

ATN416J-2

Features

- Foot mounting for all models
- Screw terminals for easy connection

Specifications

Models:

Model	Primary voltage	Secondary voltage	Output raging
ATN410J1	100, 200, 208, 220 V	100, 110 or 120V	40 VA
ATN411J1			130 VA
ATN416J-2	100, 200 V	23.5 V	200 VA

Frequency		50 to 60 Hz
Ambient temperature		0 to 60 °C
Ambient humidity		10 to 90 %RH
Weight	ATN410J1	1.5 kg
	ATN411J1	4 kg
	ATN416J-2	6.5 kg
Ordering information		Model number

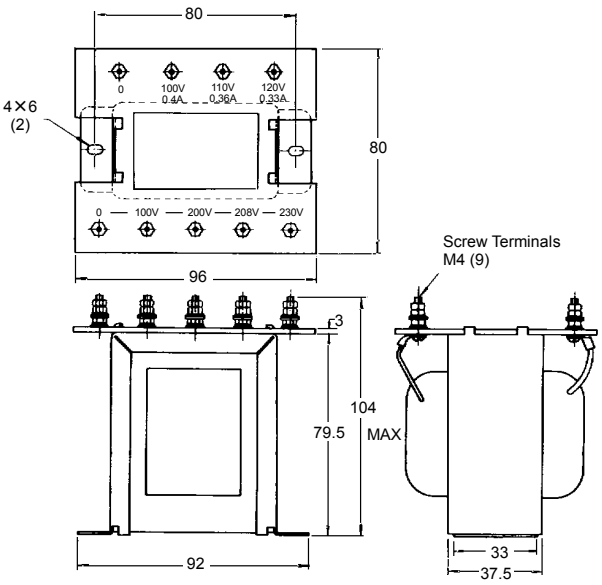

Fig. 1 Dimensions (mm) of ATN410J1

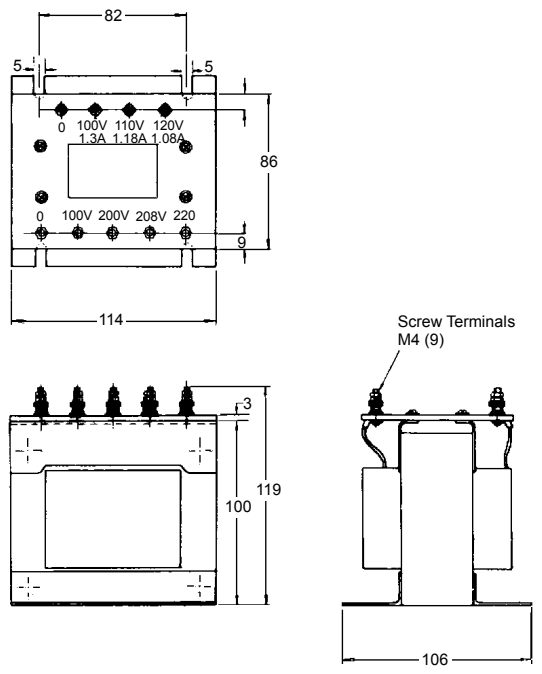

Fig. 2 Dimensions (mm) of ATN411J1

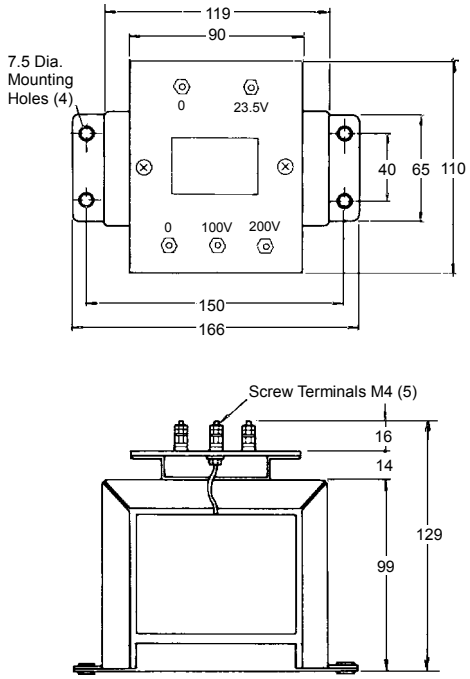

Fig. 3 Dimensions (mm) of ATN416J-2

Safety Instructions

Please read instructions carefully and use the product properly. Please keep this instruction on hand for reference at any time.

Usage Restrictions

This product is targeted for general air conditioning. Do not use this product in a situation where human life may be affected. If this product is used in clean rooms or places where reliability or control accuracy is particularly required, please contact Yamatake's sales representatives. Yamatake Building Systems Co., Ltd. bears no responsibility for any benefit, or lack of benefit, derived from the operation by the customer.

⚠ WARNING

- Disconnect power supply before beginning wiring to prevent electrical shock or equipment damage.

⚠ CAUTION

- Installer must be a trained, experienced service technician.
- Check the ratings given in this instructions to prevent equipment damage.
- Check the environment given in this instructions to prevent equipment damage.
- All wiring must comply with local codes and ordinances.
- Use crimp contacts with insulation jackets for wire terminals.
- This product is used as a component. Follow all safety requirements for circuitry and installation of units.

Mounting

ATN Transformer may be mounted in any direction. The transformer should not be mounted where ambient condition will exceed the allowable limits (refer to Specifications.) Mount the transformer with 2 or 4 screws (not furnished) through the hole of mounting foot.

Wiring

Connections are made to the screw terminals of transformer.

Refer to Fig. 4 and 5.

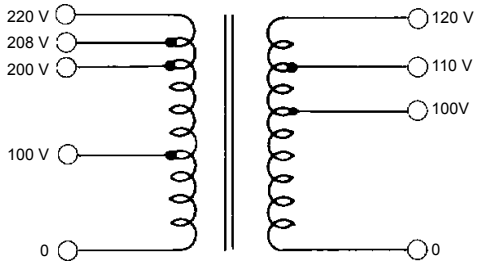

Fig. 4 Internal circuit of the ATN410J1 and ATN411J1

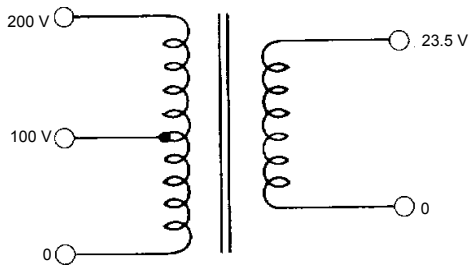

Fig. 5 Internal circuit of the ATN416J-2

Specifications are subject to change without notice.

YAMATAKE

Yamatake Corporation
Building Systems Company
International Business Headquarters

Totate International Building
1-12-19, Shibuya
Shibuya-Ku,Tokyo, 150-8316
URL:http//www.yamatake.com

Rev.A2.3 Dec. 2000

Printed in Japan. AB-4165 1H-H (W)