Carbon Monoxide Transmitter
CY7200A

General

A carbon monoxide transmitter detects levels of the poisonous gas (CO) and sends a real-time value to a control system installed in commercial and residential buildings. The CY7200A transmitter has wide applicability for the detection of concentration of CO in indoor spaces. Typical applications include detection of CO in parking garages and recreation or office spaces within a building.

Features

- The transmitter uses the constant-potential electrolytic method to provide fast, highly accurate readings. The presence of other gases does not affect its CO concentration measuring capability.
- It detects CO in concentrations as low as 0 to 60 ppm, and is ideal for controlling indoor CO levels.
- It is designed for wall mounting it is light and compact and has a design that bled in with residential humidity detectors and other sensors.
- Used in combination with programmable controller, it optimizes control of fans and other ventilating devices to maintain safe and pleasant indoor environments. The system also may help to prevent excess energy consumption in parking lots.

Specifications

Item	Specifications
Sensing range	CO concentrations of 0 to 60 ppm
Accuracy	±5 % FS (Calibrated using standard gas)
Response	Within 60s (90 % response)
Initial stabilizing time	10 min.
Working environmental conditions	Temperature: -5 to 45 °C Humidity: 10 to 95% RH (non-condensing)
Transportation and storage conditions	Temperature: -15 to 55 °C Humidity: 10 to 95 % RH (non-condensing)
Measurement principle	Constant-potential electrolytic method
Output signals	4 to 20 mA (linearly corresponds to CO concentrations of 0 to 60 ppm) Two-wire system (with common power supply line)
Power supply	24V DC (22 to 28 V DC) *1
Load resistnace	600 Ω or less
Insulation resistance	100 ΩM or greater (at 500V DC)

Item	Specifications
Withstand voltage	1kVAC
Power consumption	1W or less
Weight	90 g
Wiring	Two leads of IV 1.25 mm² or greater recommended (max. length: 100m)
Body finish	Cover: Pale beige (munsell 5Y 8/1) Base plate: Black (munsell N3.0) Mounting plate: Galvanized (chromed)
Auxiliaries (order separately)	Screws for mounting Base Plate and Mounting Plate: Two screws: M4 × 8 mm Two screws: M3 × 5 mm One screw: M3 ×10 mm Dust filter kit: CY7200Z2000 Consisting of: One filter One filter cover Five dust filters (CY7200Z3000)

*1 Use Yamatake's RY7910D series power supply unit.

Model No.

Model No.	Specifications
CY7200A1002	CO concentration transmitter (4 to 20 mA, 1 to 60 ppm)

Measurement Principle

(Constant-potential electrolytic method)

When gas is electrolyzed while maintaining potential between electrodes immersed in electrolyte, the current assumes values proportional to the gas concentration. Because the electric potential at which electrolysis takes place depends on the gas, only CO concentration is measured. CO concentration is, therefore, obtained from the potential.

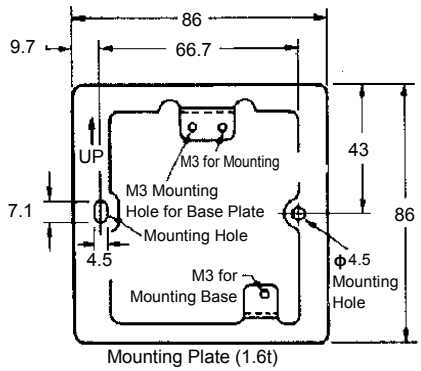

Fig.2 Mounting Plate Dimensions

Dimensions(mm)

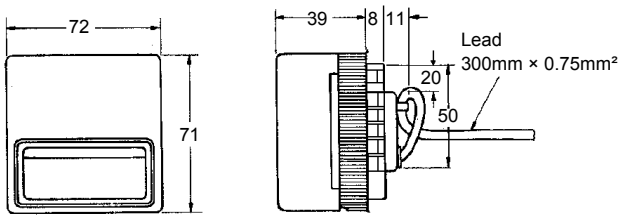

Fig.1 Dimensions

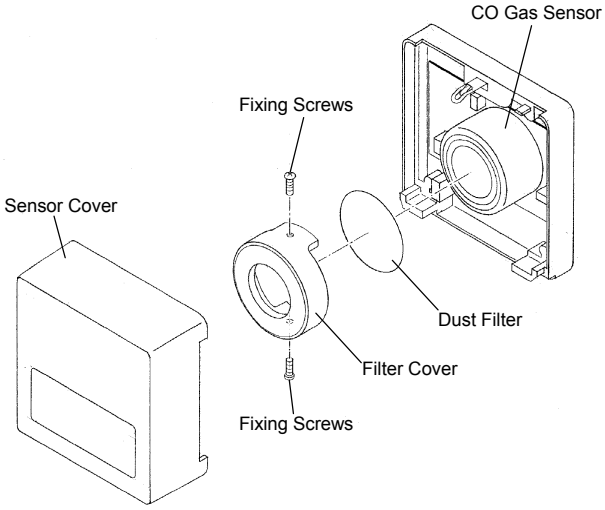

Fig.3 Dust Filter

Safety Instructions

Please read instructions carefully and use the product properly. Please keep this instruction on hand for reference at any time.

Usage Restrictions

This product is targeted for general air conditioning. Do not use this product in a situation where human life may be affected. If this product is used in clean rooms or places where reliability or control accuracy is particularly required, please contact Yamatake's sales representatives. Yamatake Building Systems Co., Ltd. bears no responsibility for any benefit, or lack of benefit, derived from the operation by the customer.

⚠ WARNING

- On disposal, the CY7200A must be dealt with as industrial waste matter as its sensor contains sulfuric acid. Should sulfuric acid leak and come into contact with skin, flush the affected parts immediately in running water for at least 15 minutes.

⚠ CAUTION

- Installer must be a trained, experienced service technician.
- Check the ratings given in this instructions to prevent equipment damage.
- Check the environment given in this instructions to prevent equipment damage.
- Do not remove or disassemble the cover expect for wiring or part replacement. Equipment damage or electrical shock may result.

Installation Site

When installing in indoor parking lots, ensure the following requirements are satisfied:

1) Air flow from the fan must reach the CY7200A.
2) Install 2 to 2.5 m above floor level.
3) Install in a position where the CY7200A does not come into direct contact with exhaust fumes.
4) Do not install near fan.
5) Install at least one CY7200A sensor on each floor of a multi-story indoor garage. Install at least one sensor in each area, if partitions segregate a floor into multiple spaces.

System Configuration (ventilation fan control for indoor parking lots)

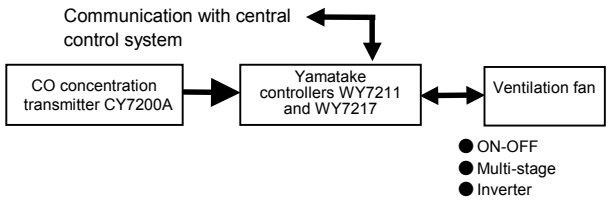

Fig.4 System configuration

Installation (main unit)

1) Fasten the painting clearance cover with 66.7 mm pitch (box cover, JIS C8336) on a standard outlet box.
2) Fasten the mounting plate on the painting clearance cover.
3) Fasten the base plate on the mounting plate.
4) Connect the wires.
5) Remove the cover from the sensor/transmitter and fasten the sensor/ transimitter on the base plate.
6) Fit the cover to the sensor/ transmitter.

Note: Order the base plate separately

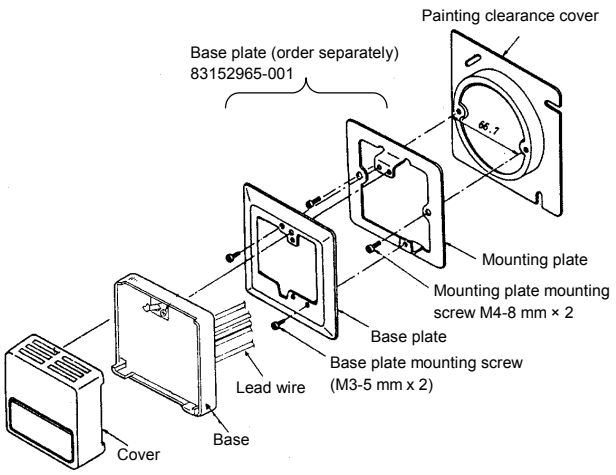

Fig.5 Installation (main unit)

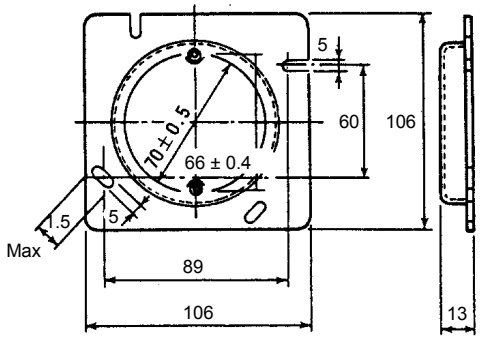

Fig.6 Cover with painting clearance complying with JIS (for medium-sized square box, puchase locally)

Table 1

Lead wire color	Signal
Red	4 to 20mA DC (+)
Blue	4 to 20mA DC (–)

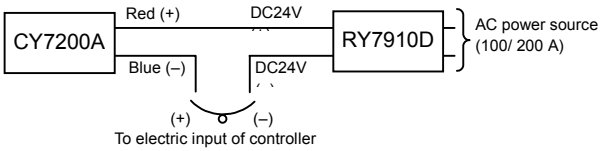

Fig.7 Wiring

- Install dust filter

Always install a dust filter when the sensor is to be installed in locations, such as bus terminals, where dust and other contaminants are present.

Generally there is no need to install at dust filters on sensors installed in underground parking lots.

NOTE:
Follow the instructions when wiring.
- Do not break or short wiring. Faulty wiring may cause damage to the sensor.
- Do not incorrectly wire 24V DC and 100/ 200V AC.
- Put the controller electric input between the sensor side (blue) and electric side.
- Set the Co sensor element ion circuit.

1) Turn the power OFF and stop power supply.
2) Remove sensor cover.
3) Put filter cover inside filter. Make net face toward the element.
4) Cover sensor. Insert screws vertically.
5) Tighten both screws evenly and in turn.
6) Check filter cover is correctly installed on element before attaching to cover.

NOTE:
Always dispose of the sensor in an appropriate manners. The CY7200A should be treated as industrial waste, sensor contains sulfuric acid.

NOTE:
Leaked sulfuric acid leak is dangerous. If contacts skin, rinse with water affected parts immediately for at least 15 minutes.

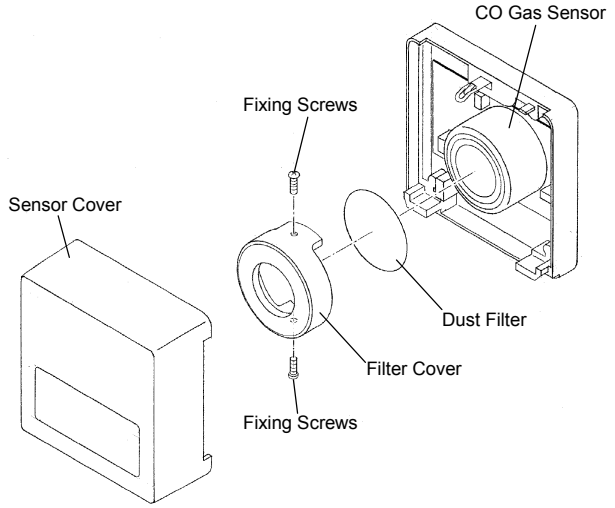

Fig.8 Mounting Dust Filter

Action Confirmation

- After installation wait 10 minutes for the sensor to stabilize. Then, check its output value against the appropriate expected range.

Table 2

Place	Range
Outdoor	0 to 3 ppm
Outdoor (near traffic)	5 to 10 ppm
Clean air office	0 to 5 ppm
Office	5 to 10 ppm
Clean air parking lot	3 to 15 ppm
Parking lot	15 to 30 ppm

- Next, light a cigarette and blow the smoke over sensor. Check that the CO concentration increases sharply within one minute.

⚠ CAUTION
• Do not install in locations where flammable gas may be present.

Specifications are subject to change without notice.

YAMATAKE

Yamatake Corporation
Building Systems Company
International Business Headquarters

Totate International Building
1-12-19, Shibuya
Shibuya-Ku,Tokyo, 150-8316
URL:http//www.yamatake.com

Rev.1.0 Oct. 2001 Printed in Japan. AB-5782 0.5H-H (W)